PROJECTA

INTELLI-RV

12V POWER MANAGEMENT SYSTEM

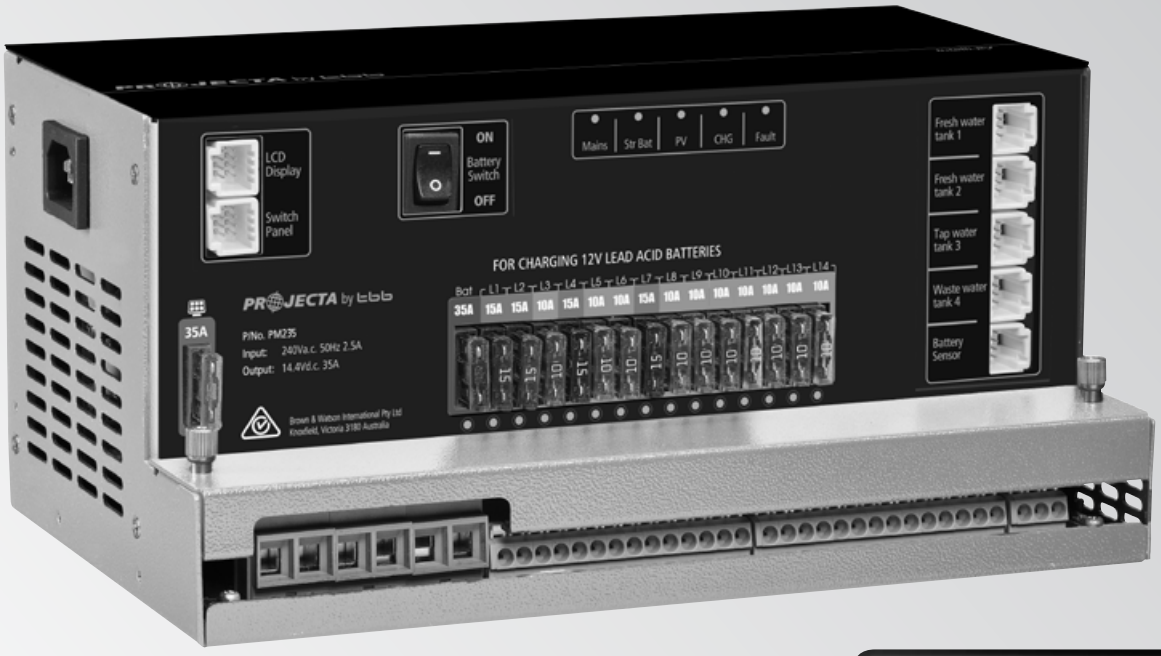

P/No. PM200

IMPORTANT SAFETY INFORMATION

Please read this manual thoroughly before use and store in a safe place for future reference.

WARNINGS

- Explosive gases. Prevent flames and sparks. Provide adequate ventilation during charging
- Before charging, read the instructions
- For indoor use. **Do not** expose to rain
- For charging Lead Acid and $LiFePO_4$ batteries **only** (of the size & voltage specified in the specification table)
- Always charge the battery on the correct voltage setting. Never set the charger to a higher voltage than the battery specifications state
- Disconnect the 240V mains supply before making or breaking the connections to the battery
- The battery charger must be plugged into an earthed socket outlet
- Connection to supply mains is to be in accordance with national wiring rules
- Do not attempt to charge non-rechargeable batteries
- Never charge a frozen battery
- If the AC cord is damaged, do not attempt to use. It must be replaced or repaired by a qualified technician
- Corrosive substances may escape from the battery during charging and damage delicate surfaces. Store and charge in a suitable area
- Where possible, ensure all vehicle accessories including lights, heaters, appliances etc. are turned off prior to charging
- This charger is not intended for use by persons (including children) with reduced physical, sensory or mental capabilities, or lack of experience and knowledge, unless they have been given supervision or instruction concerning the use of the appliance by a person responsible for their safety
- Young children should be supervised to ensure that they do not play with the appliance
- If the recreational vehicle is to be put in to storage without power, please turn off the BATTERY MASTER SWITCH. If the recreational vehicle is to be put in to long term storage without power, disconnect ALL cabling from the battery

CONTENTS

1. SYSTEM INTRODUCTION – PM200 4
1.1 Features 5
1.2 LED display 6
1.3 Water tank probes 6
2. KEY FEATURES AND FUNCTIONS 6
2.1 Multiple inputs 6
2.2 Battery charger of stationery/service battery 6
2.3 Power supply mode 7
2.4 PWM solar charge controller 7
2.5 Voltage charging relay (VCR) 7
2.6 Categorised outputs 8
2.7 Battery low voltage protection 8
2.8 Manual battery switch 8
2.9 Silent mode 8
3. STRUCTURE AND INSTALLATION 9
3.1 PM235 Transformer Unit 9
3.2 LED display 10
3.3 Water tank probes 11
3.3.1 PMWS400 water tank probe 11
3.3.2 PMWS200 water tank probe 11
4. WIRING 12
4.1 Material 12
4.2 System schematic 12
4.3 Preparation 13
4.4 Connection 13
5. DISPLAY 14
5.1 PM200 master power unit 14
5.2 LED display 15
6. OPERATION 16
6.1 Configuration on PM200 16
6.1.1 Battery capacity and battery type 16
6.1.2 Select Battery Switch Local / Remote 17
6.2 Maintenance 17
7. TROUBLE SHOOTING 18
7.1 LCD display on PM200 Unit 18
8. SPECIFICATION 19
8.1 PM200 Basic 19

1. SYSTEM INTRODUCTION – PM200

PM200 is designed for use in caravans or motor homes. The unit has integrated functions such as: battery charger, distribution blocks, PWM solar charge controller, charging relay, battery low voltage protection, water pump controller, water tank indicator and LED Display.

The PM200 is designed for an easy installation and a user-friendly interface.

SYSTEM COMPONENTS:

1. PM235 Master power unit
2. PMSWLED-2 LED display
3. PMWS200 or PMWS400 Water tank sensor (Not supplied)
4. Cables (Refer to Chapter 4.1 or the cable list)

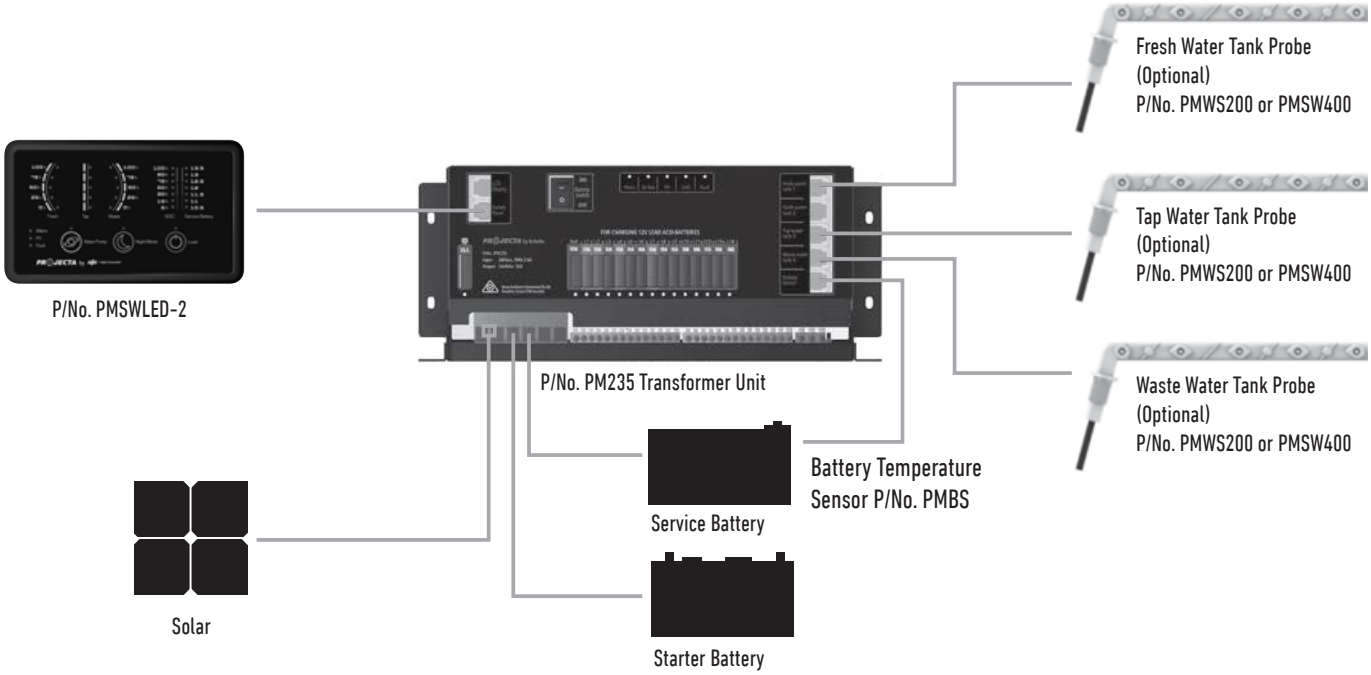

Figure 1 System Components for PM200

1.1 Features

- Smart battery charger 12V 35A (30A for charging current)
  – Multi stage adaptive charging algorithm
  – Active Power Factor Correction (PFC) charging
  – Temperature compensation charging
  – Voltage compensation charging
- Float charge for starter battery
- Solar charge controller (PWM), 30A
- 14 built in fused outputs
- Built in Voltage Sensing Relay
  – 12V 60A Continuous
  – 12V 100A Peak for 30mins
- Battery low voltage protection
- Built-in battery switch to isolate the battery when in storage
- Built-in shunt for precise battery measurement
- 1 water pump control with up to 3 connections for water sensors
- Dual control cooling fan
  – Temperature Control
  – Load Control
- Spring terminal and screw terminal
- RS-485 compatible

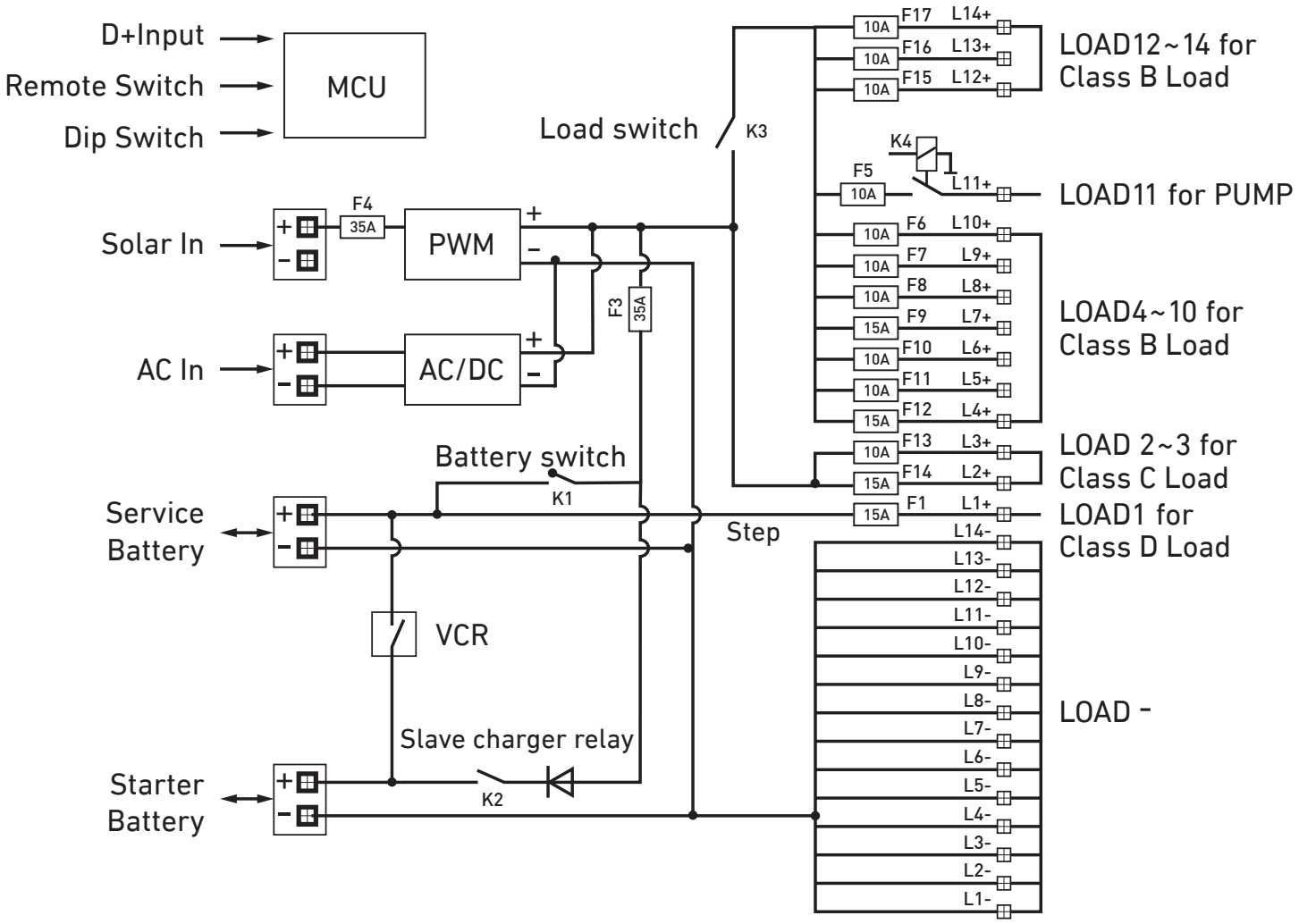

Figure 2 System Schematic

1.2 LED Display

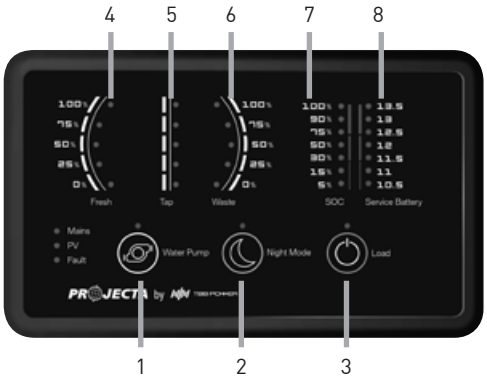

Figure 3 PMSWLED-2 switch panel

Table 1 Front panel of PMSWLED-2

Nº	LABEL	DEFINITION	DESCRIPTION
1	Water Pump	DC load control	Load control, on/off control
2	Night Mode	Scene mode	Refer to 2.10
3	Load	DC load control	Load control, on/off control. Refer to 2.7
4	Fresh Water Tank	Sensor	Detect the level of fresh water tank
5	Tap Water Tank	Sensor	Detect the level of tap water tank
6	Waste Water Tank	Sensor	Detect the level of waste water tank
7	Service Battery	SOC	Detect the state of the charge of service battery
8	Service Battery	Voltage	Detect the voltage of service battery

Table 2 LED indication of PM235

Nº	LABEL	COLOUR	STATUS	DESCRIPTION
1	Main	Green	ON	Battery charged or power supply mode
			Flash	Battery charging under grid electricity
			OFF	NO AC input
2	PV	Green	Solid	Battery charged
			Flash	Battery charging under solar energy
			OFF	NO solar input / AC charging / Aux charging
3	Fault	Red	ON	Short circuit
			1 Flash	Service battery voltage low
			2 Flash	Service battery voltage high
			3 Flash	Over temp (heat sink)
			4 Flash	Bulk charge timeout
			5 Flash	VCR anomaly
			6 Flash	Over temp (environment)

1.3 Water Tank Probes

A maximum of up to 3 probes can be monitored by the system.

NOTE: Always check the probe required for the water tank before purchase. If the probe included does not fit the water tank, please contact the seller.

There are 2 probe styles:

PMWS200:

- Side installation
- Suitable for water tank
- Depth >200mm

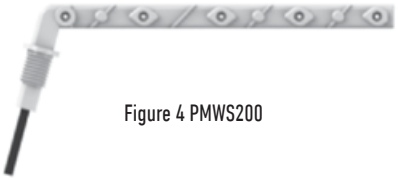

Figure 4 PMWS200

PMWS400:

- Side installation
- Suitable for water tank
- Depth 300-400mm

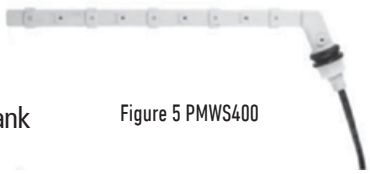

Figure 5 PMWS400

2. KEY FEATURES AND FUNCTIONS

2.1 Multiple Inputs

PM200 master power unit may have multiple charging sources at any one time. These sources include AC mains, solar and starter battery (vehicle).

Charging priorities are listed within the table to the right.

AC MAINS	X	X	
SOLAR	X		X
STARTER BATTERY		X	X
CHARGING PRIORITY	AC MAINS	AC MAINS	COMBINED

Table 3 Source priority

2.2 Battery Charger Of Stationery/Service Battery

The charger automatically starts when the appropriate qualified power is connected, either from AC mains, alternator or solar.

With multiple charging stages (soft start – bulk – absorption – float – recycle), PM200 is designed to fully charge a battery quickly. To guarantee the optimal charging for batteries of different states, the PM200 features a Microprocessor-controlled charging algorithm. The Float and Recycle charging programs guarantees that the battery condition does not change despite being connected for a longer period.

When the charger is at float Stage, if input a new source (AC Mains or Solar), the charger will return to the BULK stage.

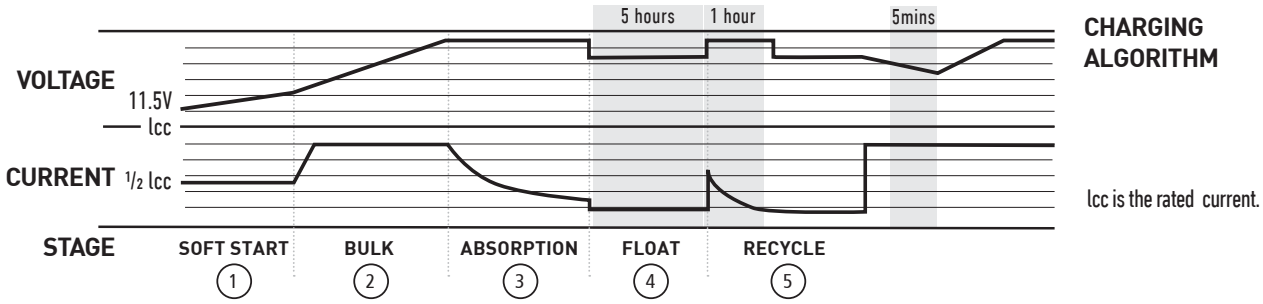

1 SOFT START
Increases battery life by gently starting to charge the battery at 50% of bulk

2 BULK
Reduces charging time by delivering maximum charge to set voltage

3 ABSORPTION
Ensures a full charge to the battery without overcharging

4 FLOAT
Float charge maintains the battery at 100% charge

5 RECYCLE

Figure 6 Charging Algorithm

Battery Temperature Sensor

The PMBS (Battery Temperature Sensor) supplied with PM200, measures the temperature of the battery and automatically adjusts, in real time, to charge the battery properly at compensation rate of – 4mv±10%/°C/cell. In case PMBS is not present, the PM200 will use 25°C as default.

Voltage Compensation Charging

With a voltage sensor PMBS the PM200 can, if required, automatically adjust its output to compensate the voltage drop caused by a cable. This assures the right voltage is being delivered for optimal charging.

Adjustable Charging Capacity

Users can adjust the charging current by specifying the battery capacity. The charging current is set at threshold rate of 10% the of the battery capacity (I = 0.1C) by default.

Lithium Battery Charging

The PM200 can be configured to charge lithium batteries. With lithium batteries, the max charging current will automatically be set at 30% of battery capacity (Imax=0.3C).

2.3 Vehicle Battery Charger

Along with a powerful charger for service battery, PM200 offers a float charge of up to 3A to keep the starter battery charged, whether connected to the AC main or PV. When starter battery is less than 12.4V, the PM200 starts charging after 30 minutes delay and stops charging when voltage reaches 12.8V.

2.4 Power Supply Mode

If no battery is attached to PM200 unit, it will work as a power supply automatically with a 12.8VDC output.

2.5 PWM Solar Charge Controller

PM200 has a built-in PWM charger for the service battery.

- Max input voltage 30VDC
- Max charging current 30A
- Max supply current 30A

2.6 Voltage Charging Relay (VCR or commonly known as a VSR)

PM200 Master Power Unit has a built-in voltage charging relay (VCR), which offers a convenient source to charge the service battery by alternator whilst the engine is running.

LEAD ACID BATTERY – When the start battery reaches 13.4VDC with threshold time delay, the VCR will charge the service battery from the alternator. VCR will continue charging until the starter battery voltage drops under 12.8VDC.

$LiFePO_4$ LITHIUM BATTERY – When the starter battery reaches 14.0VDC with threshold time delay, the VCR will charge the service battery from the alternator. The VCR will continue charging until the starter battery voltage drops below 13.5VDC with less than 2A charge to the service battery with threshold time delay.

NOTE: The PM200, when charging from the starter battery, does not provide 5 stage charging.
It simply takes whatever power and charging is available from the alternator.

NOTE: If your vehicle is fitted with a smart charging system (Variable Voltage or Temperature Compensating),
the VCR charge system may not function correctly and the PMDCS range of DC-DC chargers are recommended.

Please consult your local dealer or installer for further information.

2.7 Categorised Outputs

The 14 outputs are categorised into groups and controls as per below:

CATEGORY	QTY	DESCRIPTION	POSSIBLE LOAD SUITABLE
Class A1	1	Relay controlled output with fuse, protected by main master switch relay	Water pump
Class B	10	Fused outputs, protected by master switch relay	Ventilation fan etc
Class C	2	Live load	Fridge, security alarm etc
Class D	1	Permanent on load	Auto step

Table 4 Categorised outputs definition

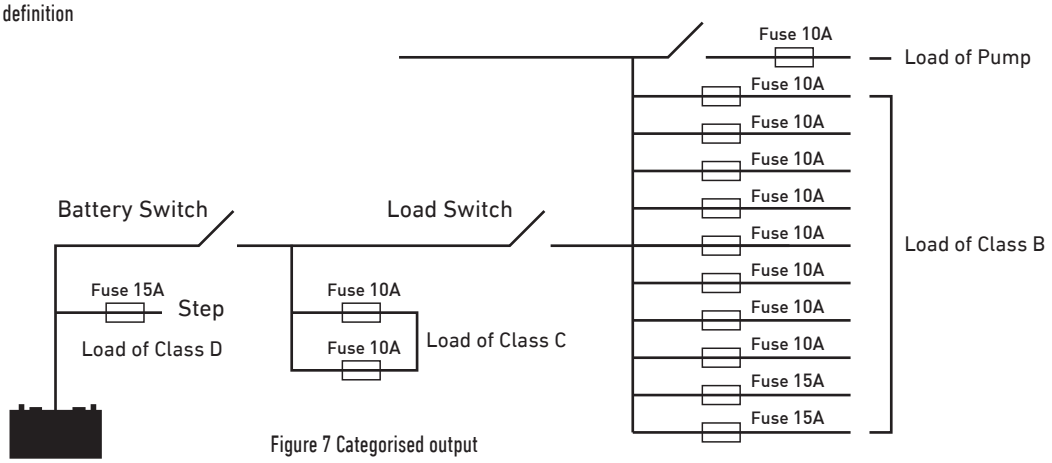

Figure 7 Categorised output

2.8 Battery Low Voltage Protection (BLVP or commonly known as an LVD)

The PM200 transformer unit has a built-in low voltage protection relay. It will disconnect the load once the battery voltage drops below the threshold voltage. The default setting is 10.5VDC.

NOTE: Class C and Class D loads remain active.

2.9 Manual Battery Switch

The PM200 unit offers a convenient way to switch off the output of the on-board service battery. It protects the service battery from being drained by the electronics on board, completely isolating the battery. PM200 unit also supports a remote manual battery switch. Before using the remote switch, ensure the 'switch selector' is set to 'Remote'. The switch is only effective when the system has no other energy resource for the load except the battery.

2.10 Silent Mode

In Silent Mode, the backlight of the LED Display and the fan will be turned off or decreased in speed.

3. STRUCTURE AND INSTALLATION

3.1 PM200 Master Power Unit

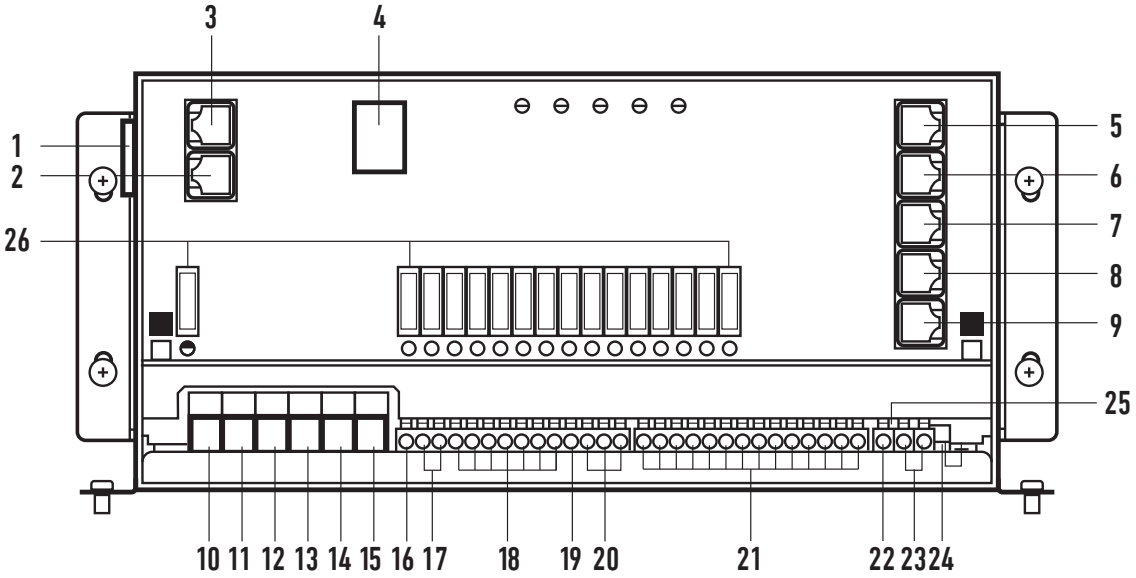

Figure 8 Front panel of PM235

Nº	LABEL	DEFINITION	DESCRIPTION
1	AC Mains	AC input port	
2	Ambient Temp Sensor	Comm port	Connect to switch panel
3	LCD Display	Comm port	Connect to Monitor (Monitor is not available in PM200)
4	Power Switch	Service battery switch	Manual battery switch
5	Fresh Water Tank 1		Connect to fresh water tank 1
6	Fresh Water Tank 2		Fresh water tank 2 is not available in PM200
7	Tap Water Tank		Connect to tap water tank
8	Waste Water Tank		Connect to waste water tank
9	Battery Sensor	For voltage and temperature compensation	Connect to service battery+
10	PV+	Solar input	Connect to PV+ terminal
11	PV-	Solar input	Connect to PV- terminal
12	Starter Bat+	Starter battery+	Connect to starter battery+ (<16Vdc)
13	Service Bat+	Service battery+	Connect to service battery+ (<16Vdc)
14	Starter Bat-	Starter battery-	Connect to starter battery-
15	Service Bat-	Service battery-	Connect to service battery-
16	L1+	Step	Connect to load of class D
17	L2+ ~ L3+		Connect to load of class C
18	L4+ ~L10+		Connect to load of class B
19	L11+	Water pump	Connect to water pump+
20	L12+ ~ L14+		Connect to load of class B
21	L1- ~ L14-		Connect to DC load -
22	D+ Point	D+ input	Connect to D+
23	Remote Switch	Terminal block	Connect to remote switch
24	Select Switch	Dip switch	Select local switch or remote switch (**NOTE:** open the upper cover board to operate)
25	Setting	Dip switch	Set the battery type and capacity (**NOTE:** open the upper cover board to operate)
26	Fuse		Fuse and fuse failure indication

Table 5 Categorised outputs

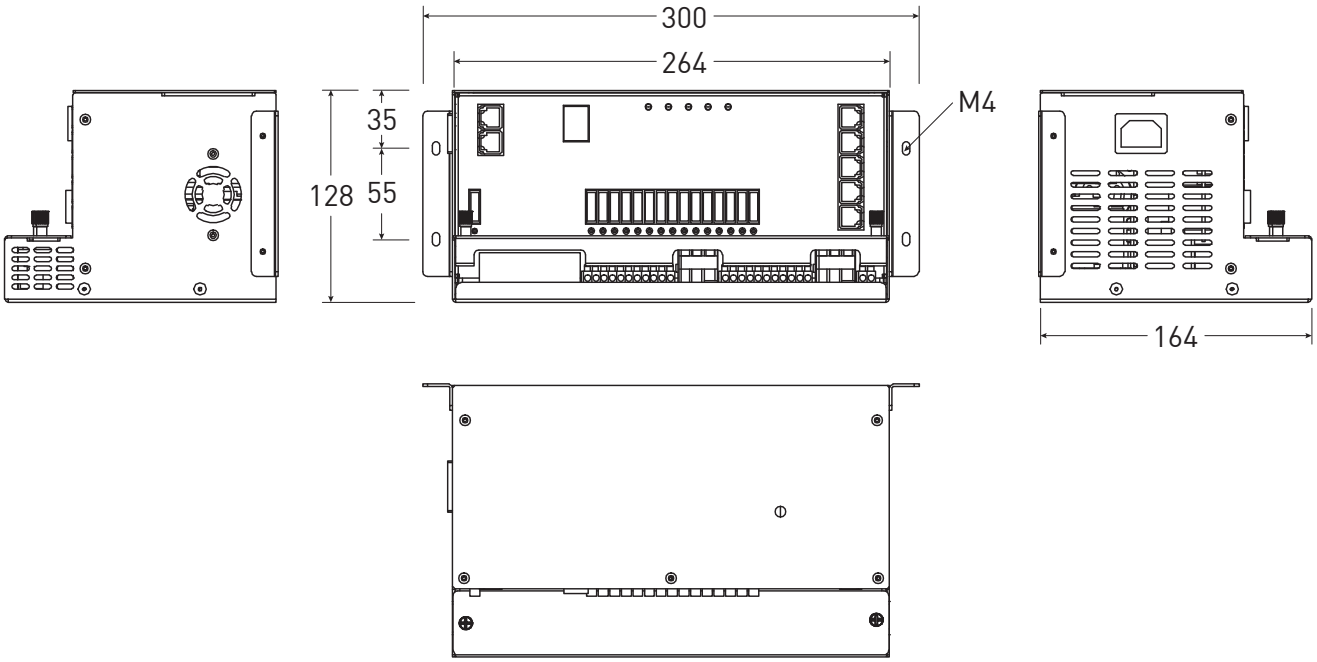

Figure 9 Dimension of PM235 (Unit: mm)

Installation:

PM235 can be installed on a horizontal surface or vertically on a wall. Please see following instructions:

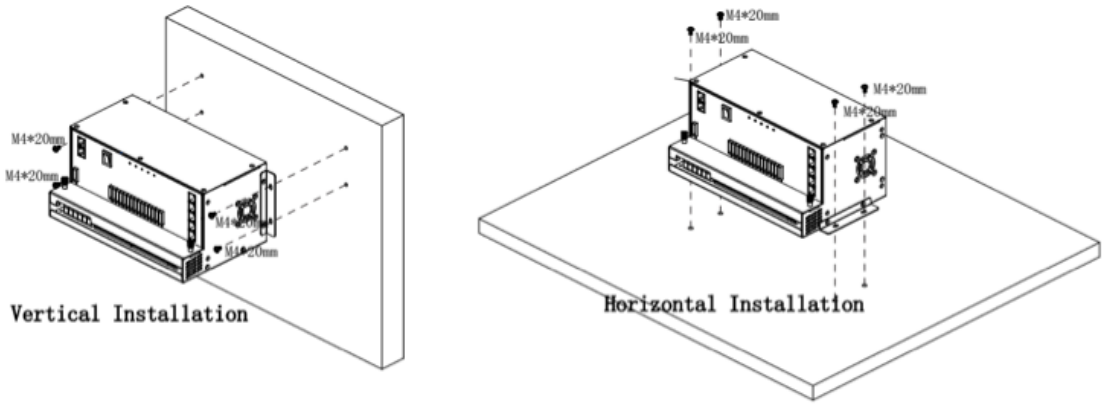

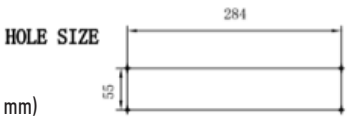

Figure 10 Installation of PM235 (Unit: mm)

Ensure clearance on both sides of PM235 unit upon installation. A recommended clearance of 5cm on each side.

3.2 LED Display

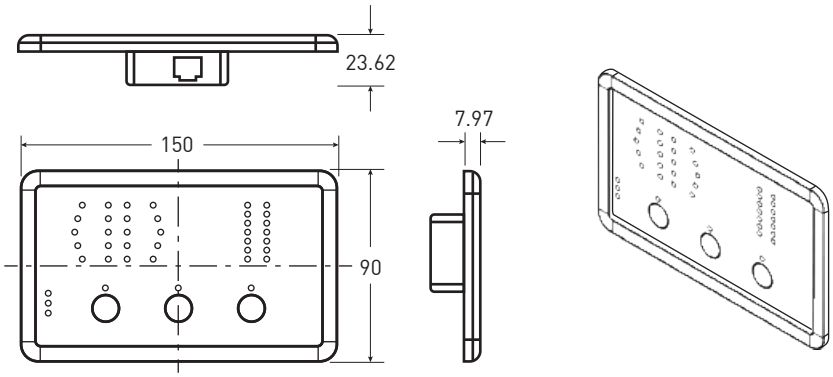

Figure 11 Dimension of PMSWELD (Unit: mm)

Installation:

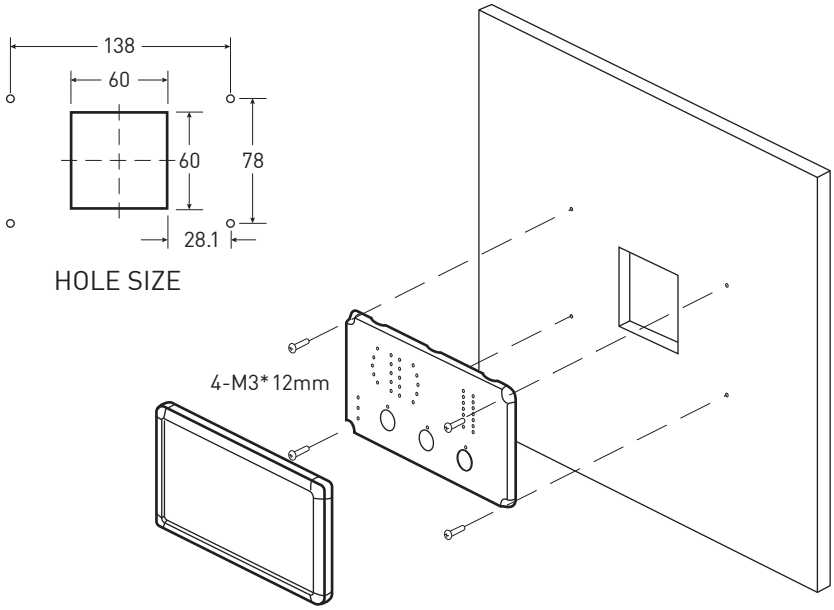

Figure 12 Installation of PMSWELD (Unit:mm)

3.3 Water Tank Probe

3.3.1 PMWS400 Water Tank Probe

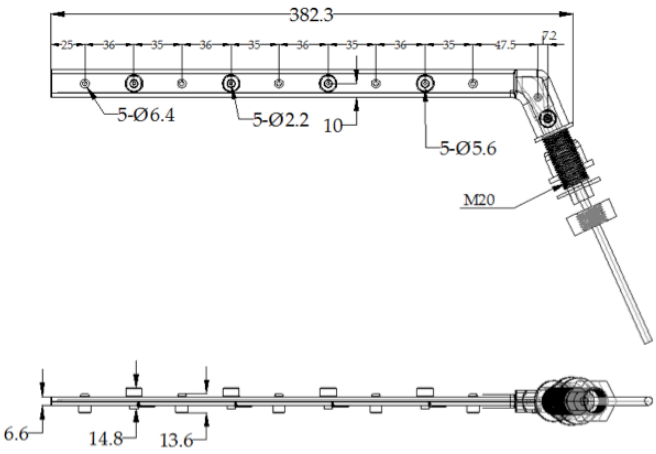

Figure 13 Dimension of PMWS400 (Unit:mm)

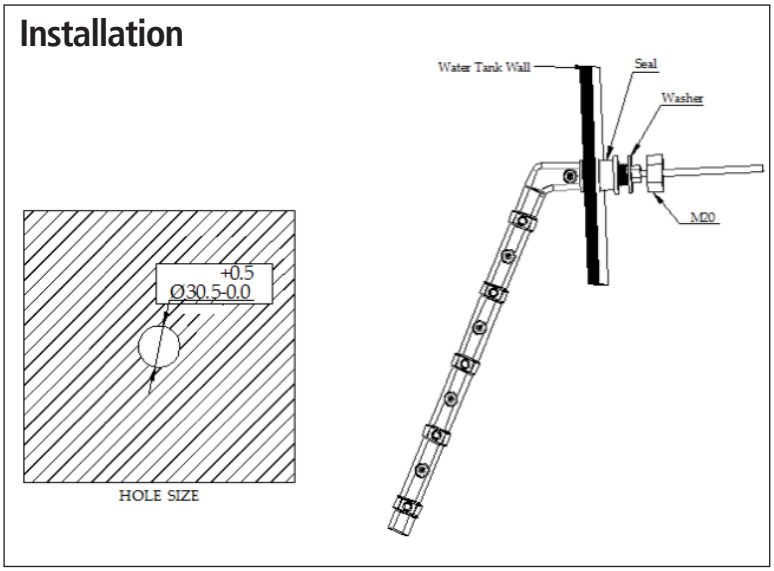

Figure 14 Installation of PMWS400

3.3.2 PMWS200 Water Tank Probe

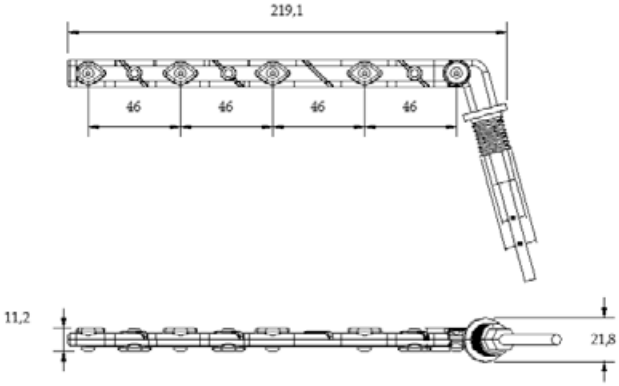

Figure 15 Dimension of PMWS200 (Unit:mm)

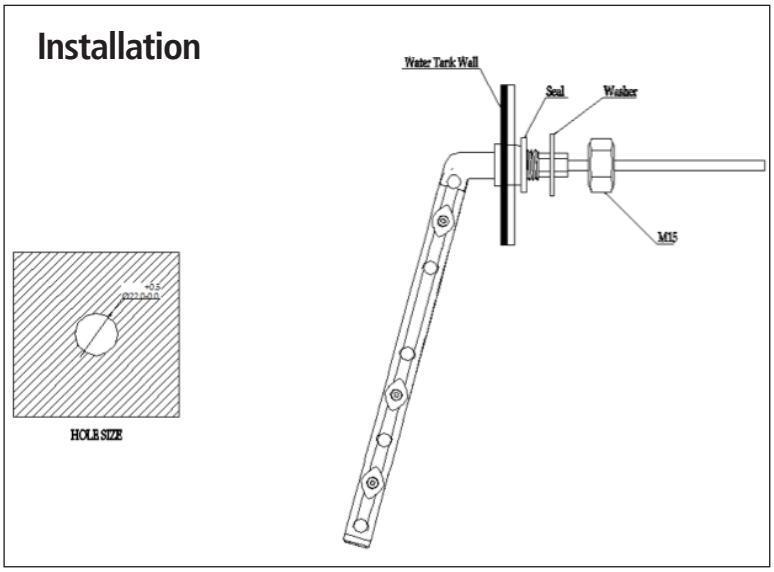

Figure 16 Installation of PMWS200

4. WIRING

4.1 Material

CODE	NAME	MODEL/ LENGTH	QTY	P/No. ON DRAWING
1	Caravan Master Power	PM235J	1	1
2	Membrane Switch Panel	PMSWLED-2	1	3
3	Fresh Water Tank Level Sensor	Not included and to be ordered separately	0	4
4	Tap Water Tank Level Sensor		0	6
5	Waste Water Tank Level Sensor		0	7
6	PV		0	9

CODE	NAME	MODEL/ LENGTH	QTY	P/No. ON DRAWING
7	Switch Panel Line	5m	1	PMSWLEDC
8	Battery Sensor Line	3m	1	PMBS
9	Water Tank Probe Line	4m	0	PMWS200 / PMWS400
10	Water Tank Probe Line	4m	0	
11	Water Tank Probe Line	4m	0	
12	Power Cable	1.5m	1	PMAC

Table 6 Component list of PM200

4.2 System Schematic

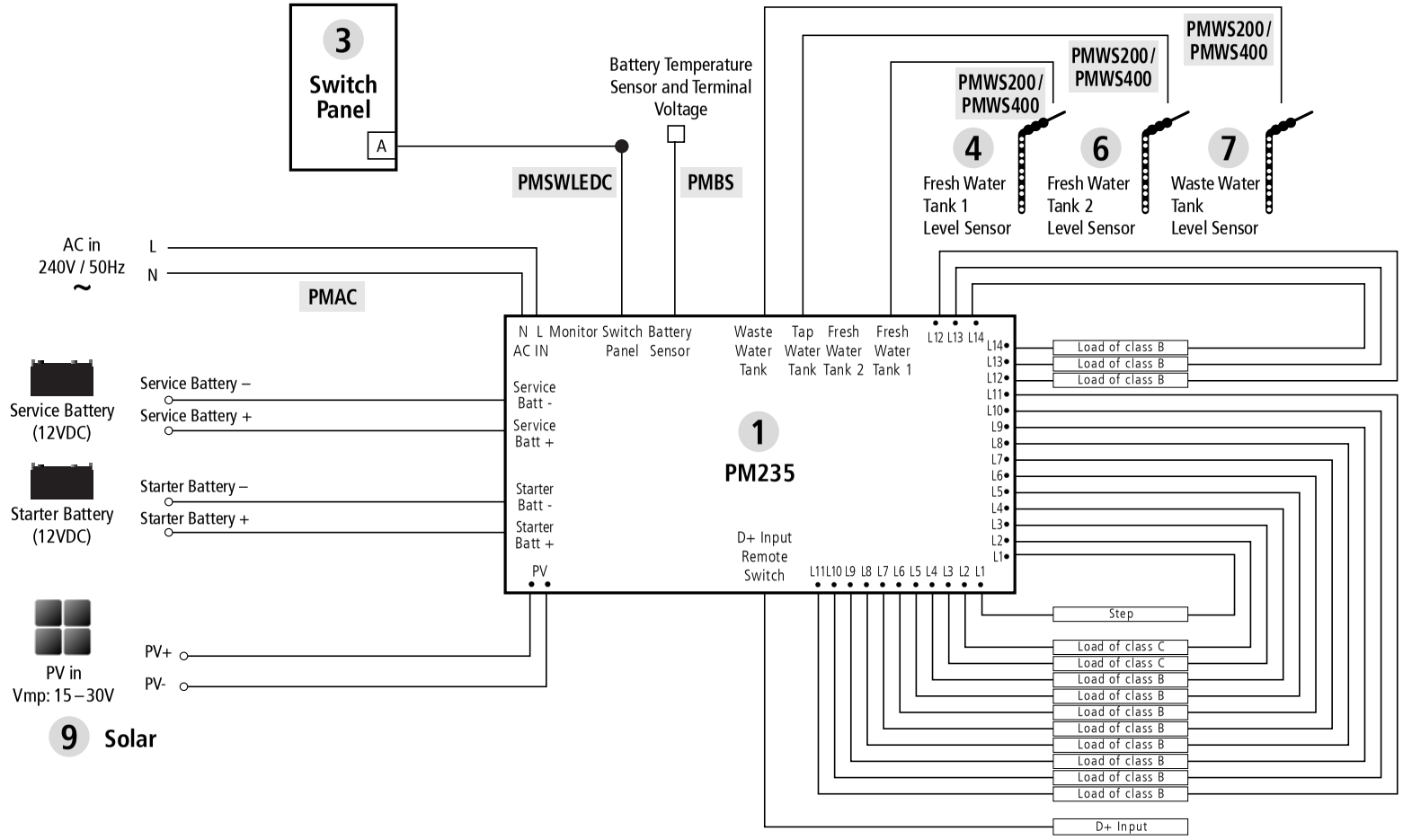

Figure 17 System diagram

4.3 Preparation

PM200 system is designed with the concept of 'Plug in and Play' in mind. To complete the easy installation, a screw driver and DC cables are required. Follow Table 5 recommendation for minimum wiring size.

CURRENT	MINIMUM CABLE SIZE
0–5A	1.0mm^2 or 18 AWG
5–10A	2.0mm^2 or 14 AWG
10–15A	3.0mm^2 or 13 AWG
15–20A	4.0mm^2 or 11 AWG
20–25A	5.0mm^2 or 10 AWG
25–30A	6.0mm^2 or 9 AWG

Table 7 Minimum cable size

When running cables, if they pass through panels or wall, ensure the cables are protected from damage by sharp edges. In such cases, it is recommended to use cable glands.

Recommendation is to install the PM200 as close to the service battery as possible to minimize voltage drop and ensure accurate charging.

4.4 Connection

PM200 unit is designed with a spring and screw terminal. Please refer to following illustration below.
Each type of terminal is designed to fit a different range of cables.

TYPE	TERMINAL MODEL NUMBER	SUITABLE CABLE GAUGE
Type 1	ERTB10-10.16	0.5mm^2 – 10mm^2
Type 2	Wago804-114	0.25mm^2 – 2.5mm^2

Table 8 Recommended terminal and cable gauge

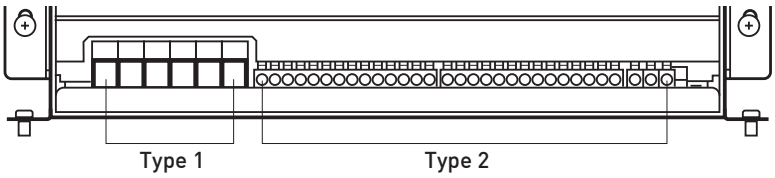

Figure 18 PM235 Terminal

TYPE 1

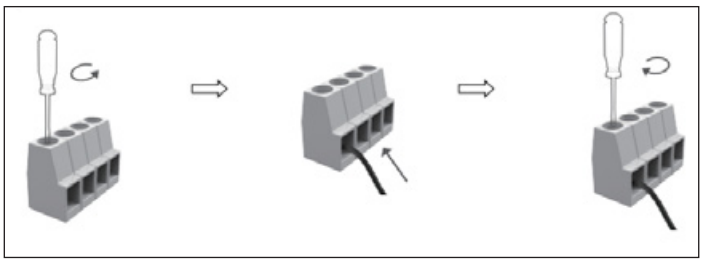

Figure 19 Connection of Terminal Type 1

TYPE 2

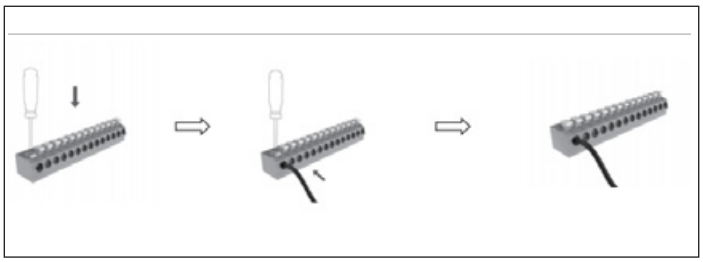

Figure 20 Connection of Terminal Type 2

5. DISPLAY

5.1 PM235 Master Power Unit

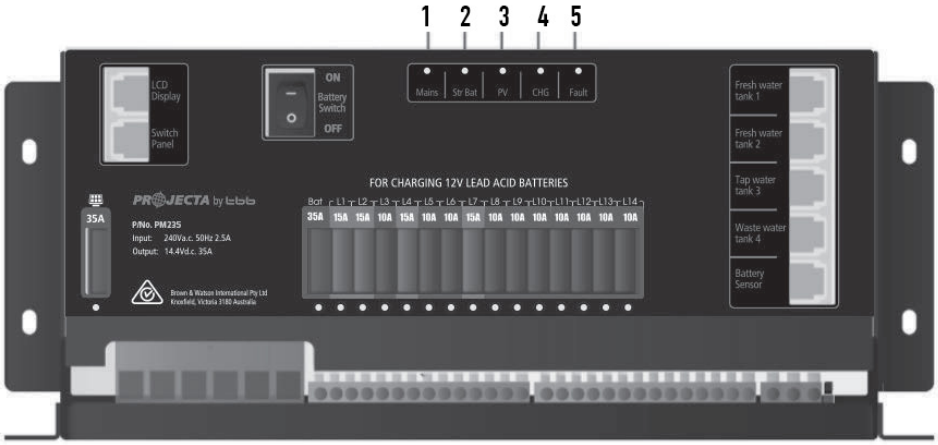

Figure 21 An overview of PM235

No.	LED	COLOUR	STATUS	DESCRIPTION
1	Mains	GREEN	ON	AC input OK
			OFF	AC disconnected
			Quick flashing (flash twice every second)	AC input abnormal
2	Starter Bat	GREEN	ON	Starter battery charging the battery
			Slow flashing (flash once every second)	The input of the Aux is normal but it is charged by the AC
			Quick flashing (flash twice every second)	Starter battery input error
			OFF	Starter battery disconnected.
3	PV	GREEN	ON	PV charging the battery
			Slow flashing (flash once every second)	The input voltage of the PV is normal but it is charged by the AC or Starter battery
			Quick flashing (flash twice every second)	PV input error
			OFF	PV disconnected
4	CHG	GREEN	ON	Battery charged
			Flashing (flash once every second)	Battery charging
			Slow flashing (1 second on 2 seconds off)	Battery discharge
			OFF	Battery disconnect
5	FAULT	RED	ON	Short circuit
			1 flash	Service battery voltage low
			2 flash	Service battery voltage high
			3 flash	Over temperature (heat sink)
			4 flash	Bulk charge timeout
			5 flash	VCR anomaly
			6 flash	Over temperature (ambient)
			8 flash	BMS Over-Voltage Protection

Table 9 LED indicator description of PM235

5.2 LED Display

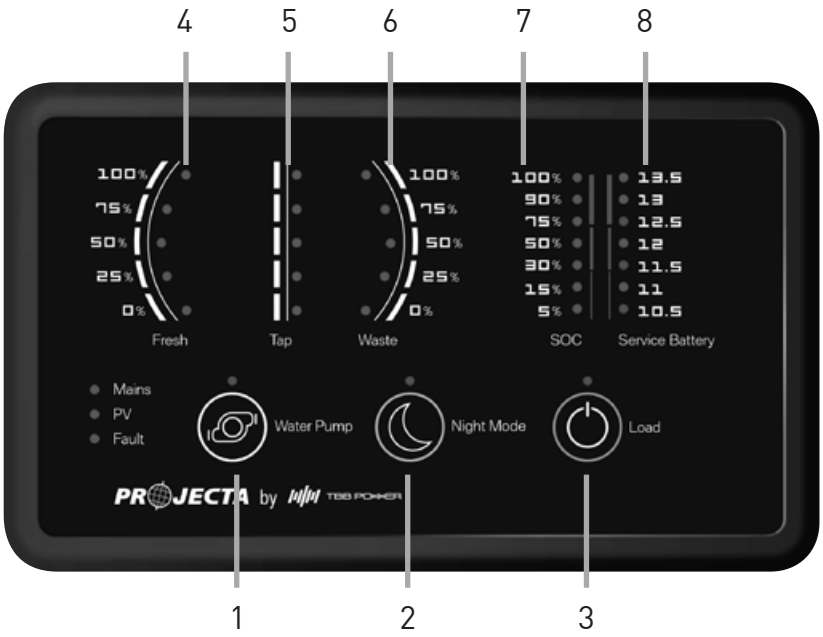

Figure 22 An overview of PMSWLED-2

Nº	LABEL	TYPE	DESCRIPTION
1	Water Pump	DC Load Control	Load control, on/off control
2	Night Mode	Scene Mode	Refer to 2.10
3	Load	DC Load Control	Load control, on/off control. Refer to 2.7
4	Fresh Water Tank	Sensor	Detect the level of fresh water tank
5	Tap Water Tank	Sensor	Detect the level of tap water tank
6	Waste Water Tank	Sensor	Detect the level of waste water tank
7	Service Battery	SOC	Detect the state of the charge of service battery
8	Service Battery	Voltage	Detect the voltage of service battery

Table 10 Front panel of PMSWLED-2

Nº	LABEL	COLOUR	STATUS	DESCRIPTION
1	Mains	Green	ON	Battery charged or power supply mode
			Flash	Battery charging under grid electricity
			OFF	NO AC input
2	PV	Green	Solid	Battery charged
			Flash	Battery charging under solar energy
			OFF	NO solar input / AC charging / Str Bat Charging
3	Fault	Red	Voltage	Detect the voltage of starter battery
			ON	Short circuit
			1 Flash	Service battery voltage low
			2 Flash	Service battery voltage high
			3 Flash	Over temp (heat sink)
			4 Flash	Bulk charge timeout
			5 Flash	VCR anomaly
			6 Flash	Over temp (environment)
			8 Flash	BMS Over-Voltage Protection

Table 11 LED indication description of PMSWLED-2

Note: To ensure accurate SOC in cases where the system incorporates an external inverter or other load device directly to the battery, replace the display with PMLCD-BT and install PMSHUNT.

6. OPERATION

6.1 Configuration on PM200

Battery type and capacity are configured via PM235 master power unit.

6.1.1 Battery Capacity and Battery Type

There is a dip switch for you to set battery capacity and battery type.

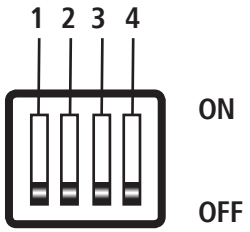

Figure 23 Dip Switch of PM200

Dip switch definitions:

DIP SWITCH	1	2	3	4
	Charging Current		Battery Type	

Table 12 Dip Switch definition

Configure the max charging current of PM235:

		LEAD ACID		LITHIUM
DS1	DS2	AC CHARGE	SOLAR CHARGE	LITHIUM
ON	ON	10A	20A	30A
ON	OFF	15A	30A	30A
OFF	ON	20A	30A	30A
OFF	OFF	30A	30A	30A

Table 13 Battery Capacity setting by dip switch

When choosing max charging current, please take into consideration the consumption of the DC load connected with the system.

Configure the battery type connected:

DS3	DS4	BATTERY TYPE	ABSORPTION	FLOAT
OFF	OFF	AGM	14.4V	13.5V
OFF	ON	GEL	14.1V	13.5V
ON	OFF	$LiFePO_4$	14.2V	13.5V
ON	ON	WET	14.7V	13.7V

Table 14 Battery Type setting by dip switch

Factory default setting:

DIP SWITCH	1	2	3	4
STATUS	OFF	OFF	OFF	OFF

Table 15 Factory default setting

6.1.2 Select Battery Switch Local/Remote

This function offers a possibility for user to use a remote battery switch to power on/off the service battery output

Figure 24 Local/Remote Select Switch

DIP SWITCH	DESCRIPTION
Local	The switch on PM235 unit works
Remote	The remote switch works and local one is disabled

Table 16 Local/Remote Setting

6.2 Daily Maintenance

- Confirm the Battery Switch is switched on when you want to charge the battery with the AC grid.
- Check the nominal battery voltage is 12Vdc.
- Ensure the space (5cm each side) beside the PM235 unit for the good ventilation.
- When replacing and existing battery, please fully charge via AC grid to ensure SOC% is accurately calibrated.

It is recommended to switch off the local Battery Switch on main panel of PM200 master power unit or remote switch to cut off the consumption of the service battery.

7. TROUBLE SHOOTING

7.1 L.E.D Display on PM235 Unit

No.	LED	COLOUR	STATUS	DESCRIPTION
1	Mains	GREEN	Quick Flashing (flash twice every second)	AC input abnormal
2	Str Bat	GREEN	Quick Flashing (flash twice every second)	The Starter Battery is 2~13.4V or >16.0V, while AC power is connected.
3	PV	GREEN	Quick Flashing (flash twice every second)	Solar input voltage error – Solar input >30Vdc
4	Fuse L.E.D	RED	OFF	Fuse blown, need to check load and replace fuse
5	FAULT	RED	ON	Short circuit
			1 Flash	Service battery voltage low
			2 Flash	Service battery voltage height
			3 Flash	Over temp (heat sink)
			4 Flash	Bulk charge timeout
			5 Flash	VCR anomaly
			6 Flash	Over temp (environment)
			8 Flash	BMS Over-Voltage Protection

Table 17 Error LED indicator of PM235

8. SPECIFICATIONS

MODEL		PM235
ELECTRICAL SPECIFICATIONS		
Grid	Nominal input voltage (V)	240±10%VAC 50/60Hz
	Power factor	0.95
	Input current at full load	2.5A
Battery	Starter battery	12VDC
	Starter battery voltage range	12.8 – 16VDC
	Service battery	12VDC
	Service battery voltage range	10.5 – 16VDC
PV	Charger type	PWM
	Open circuit voltage	30VDC
	Max charging current	30A
	Maximum solar input	800W
Charging Relay	Relay specification	12VDC 60A continuous, peak current 100A, 30mins
	Connect voltage	Lead Acid - 13.4VDC $LiFePO_4$ - 14.0VDC
	Connect delay time	10sec
	Disconnect voltage	Lead Acid - 12.8VDC $LiFePO_4$ - 13.5VDC<2A
	Disconnect delay time	60sec
	High voltage limit	16.0VDC
Charger Mode	Charge Algorithms	5 Stage
	Battery type	AGM/GEL/LFP ($LiFePO_4$)//WET
	Start voltage	Lead Acid – 2VDC Lithium – 0VDG
	Bulk current	30A (Max)
	Absorption voltage	(14.4/14.1 /14.2/14.7) ±0.15VDC
	Float voltage	(13.5/13.5 /13.5/13.7) ±0.13VDC
Power Supply Mode	Nominal output voltage	12.8±0.2 VDC
	Rated output current	35A (Continuous)
Efficiency		88%
Working Temperature		-40°C~+65°C (50°C:full load; 60°C:20A; 65°C: shutdown the output)

MODEL		PM235	
ELECTRICAL SPECIFICATIONS			
Battery Disconnect (LVD)	Disconnect voltage	AGM/GEL/WET	10.5VDC (default)
		LFP ($LiFePO_4$)	11.2 VDC (Default)
	Delay off time	60 sec	
	Reconnect voltage	AGM/GEL/WET	11.5VDC (default)
		$LiFePO_4$	12.2 VDC (Default)
Current Draw on Battery	240VAC is off, no vehicle charging	405mA	
	LVD battery <10.5V current draw on battery	110mA	
	LVD battery <10V current draw on battery	0mA	
Fused Outputs	Numbers	14	
	Rated Current	15A x 4, 10A x 10	
Protection	Short circuit on output	Fuse blown	
	Reverse polarity	Diode reverse isolation	
	Overload protection	Derate the output until overload is removed	
	Battery charger over temperature	Shut down PM235	
	Ambient over temperature	Alarm	
	Battery over voltage limits	Battery charger disconnect, loads disconnect	
PHYSICAL SPECIFICATIONS			
Dimensions (L*W*H)	264 × 164 × 128mm		
Weight	3kgs		
Enclosure	Steel Case		
Battery Connector	M4 Screw (16mm^2)		
Load Connector	Wago804-114 (2.5mm^2)		
Cooling	Forced cooling		
Protection Category	IP20		
Approvals			
Electrical	AS/NZS 60335.2.29		
EMC	CISPR14		

Table 18 Specification of PM235

WARRANTY STATEMENT

Applicable only to product sold in Australia

Brown & Watson International Pty Ltd of 1500 Ferntree Gully Road, Knoxfield, Vic., telephone (03) 9730 6000, fax (03) 9730 6050, warrants that all products described in its current catalogue (save and except for all bulbs and lenses whether made of glass or some other substance) will under normal use and service be free of failures in material and workmanship for a period of two (2) years (unless this period has been extended as indicated elsewhere) from the date of the original purchase by the consumer as marked on the invoice. This warranty does not cover ordinary wear and tear, abuse, alteration of products or damage caused by the consumer.

To make a warranty claim the consumer must deliver the product at their cost to the original place of purchase or to any other place which may be nominated by either BWI or the retailer from where the product was bought in order that a warranty assessment may be performed. The consumer must also deliver the original invoice evidencing the date and place of purchase together with an explanation in writing as to the nature of the claim.

In the event that the claim is determined to be for a minor failure of the product then BWI reserves the right to repair or replace it at its discretion. In the event that a major failure is determined the consumer will be entitled to a replacement or a refund as well as compensation for any other reasonably foreseeable loss or damage. This warranty is in addition to any other rights or remedies that the consumer may have under State or Federal legislation.

IMPORTANT NOTE

Our goods come with guarantees that cannot be excluded under the Australian Consumer Law. You are entitled to a replacement or refund for a major failure and compensation for any other reasonably foreseeable loss or damage. You are also entitled to have the goods repaired or replaced if the goods fail to be of acceptable quality and the failure does not amount to a major failure.

Distributed by

AUSTRALIA

Brown & Watson International Pty Ltd

Knoxfield Victoria 3180
Phone: (03) 9730 6000
Fax: (03) 9730 6050
National Toll Free: 1800 113 443

NEW ZEALAND OFFICE

Griffiths Equipment Ltd.
19 Bell Avenue,
Mount Wellington,
Auckland 1060, New Zealand
Phone: (09) 525 4575

IS402
Issue No. 3 30.10.23